B.KEOGH & SONS
MANUFACTURING PTY LTD

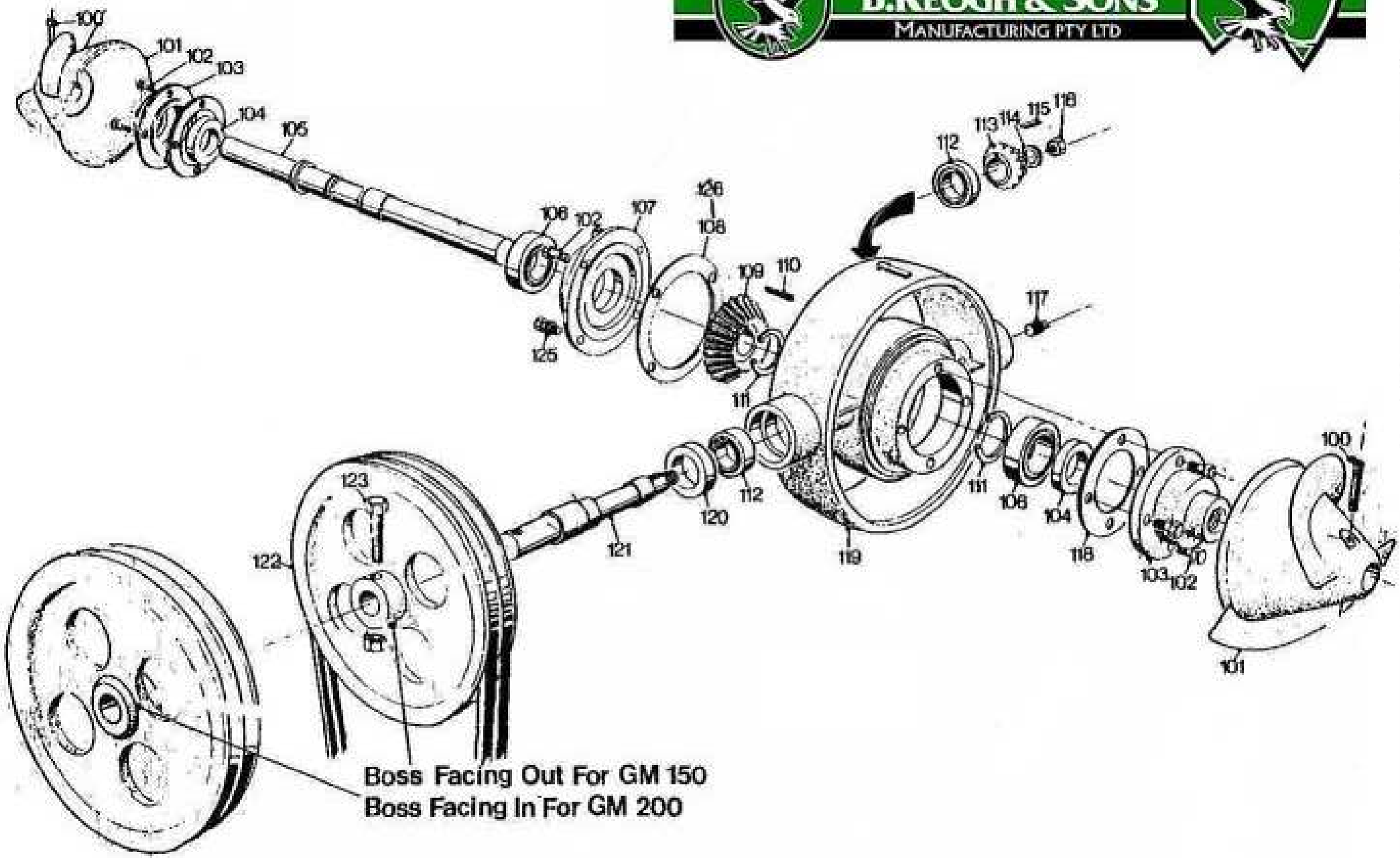

Gearbox Assembly